Dino Auto Play

COMPONENTS:

1. Arduino Neno

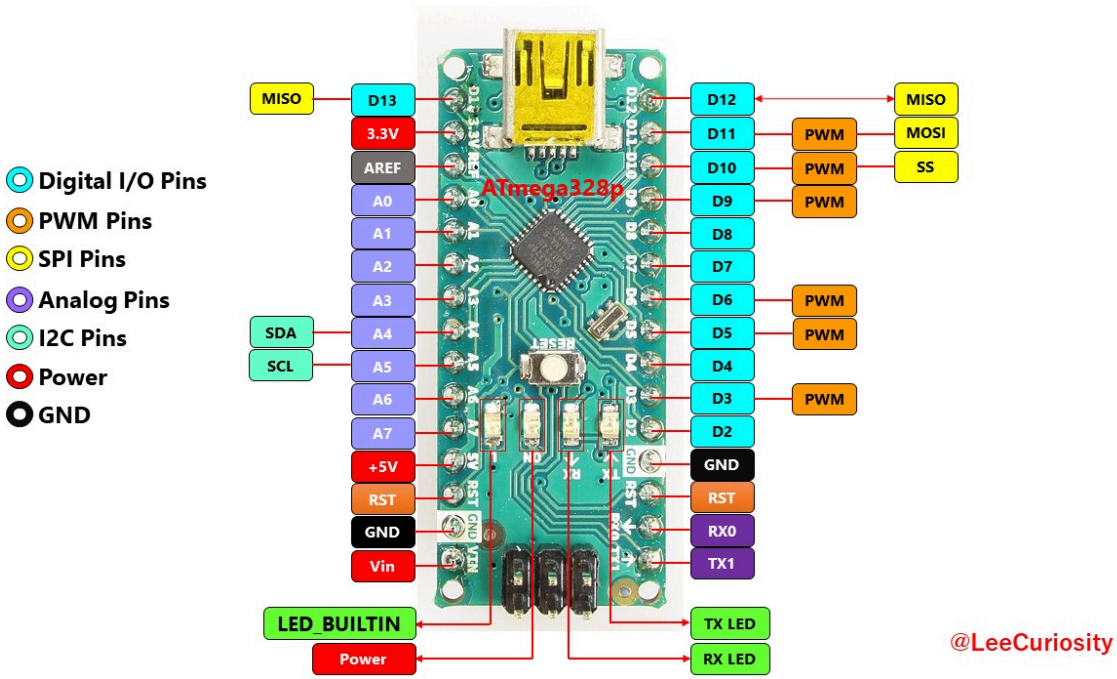

2. **Servo sg90**

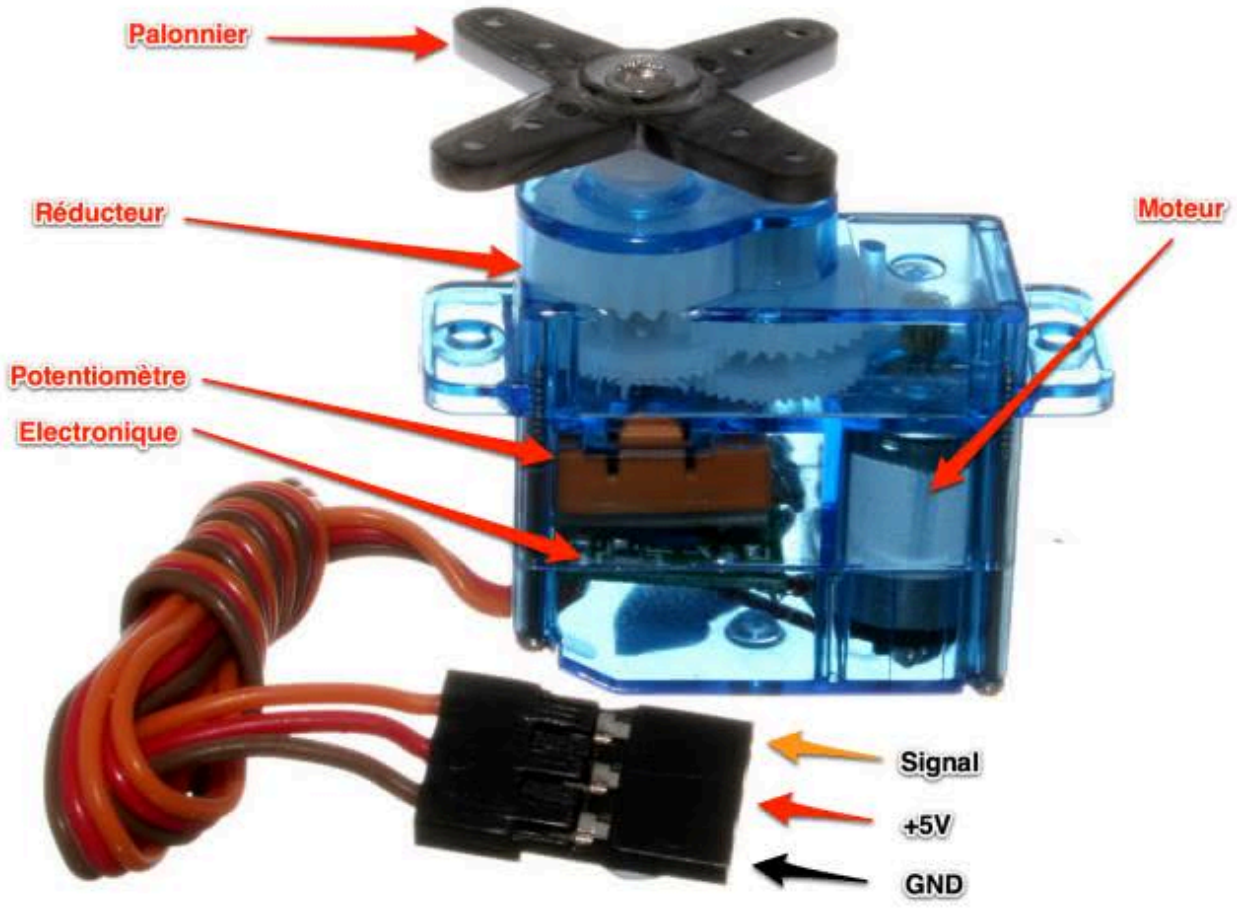
Palonnier
Réducteur
Moteur
Potentiomètre
Electronique
Signal
+5V
GND

3. **LDR Sensor**

4. **Breadboard**
5. **Jumper wires**
6. **Resistor**

Connections:

- **LDR sensor to Arduino Nano:**

Component	Connect To
LDR leg 1	5V
LDR leg 2	Arduino A0
10k resistor	Between A0 and GND

- **Servo SG90 to Arduino Nano:**

Wire	Connect
Red	5V
Brown	GND
Orange	D9

- **Arduino Nano to 5V Battery:**

Pin	Connect
5V	Battery +
GND	Battery –

Note: Power supply should be 5v.